MIKRODEV®

Innovation in Automation

DM100

HARDWARE MANUAL

- DM100

  RTU Series

DOCUMENT NAME	DATE	VERSION
MIKRODEV_AN_DM100_ HARDWARE_MANUAL_v1.1	03 / 2026	Telediagram 19.0.0 (Official Build) Firmware: 19.11 and above

CONTENTS

FIGURES LIST 2
Preface 3
About Mikrodev 4
WARNING! 5
1 DM100 GENERAL INFORMATION 6
1.1 GC0 Board Type Physical Interfaces 6
1.2 GC3 Board Type Physical Interfaces 7
1.3 General Device Specifications 8
2 INSTALLATION INFORMATION 9
2.1 Rail Installation 9
2.2 Expansion Installation 10
3 CONNECTION DIAGRAMS 11
3.1 Supply Connection 11
3.2 RS485 Serial Port 12
3.3 RS232 Serial Port 13

FIGURES LIST

Figure 1 GC0 Board Type Connector and Physical Interface 6
Figure 2 GC3 Board Type Connector and Physical Interface 7
Figure 3 Mounting 9
Figure 4 Expansion Installation 10
Figure 5 Power Connection Diagram 11
Figure 6 RS485 Serial Port Connection Diagram 12
Figure 7 RS232 Serial Port Connection Diagram 13

Preface

Mikrodev DM100 RTU series are programmable control devices that are used in a wide range of applications from process automation to building automation, from machine automation to telemetry applications.

In this document, you can find information about the hardware specifications of Mikrodev DM100 series RTUs.

Please follow our website www.mikrodev.com for the up to date version of the document.

About Mikrodev

Since 2006, MIKRODEV has been developing and manufacturing industrial control and communication products. MIKRODEV serves the system integrators in the public and private sector, OEM and end users.

Our products are manufactured complying with the quality standards required by the industrial automation industry and the quality of our products are proved on the field for many years

MIKRODEV is one of the few companies in the world that has its own designed IEC 61131-3 compliant library for its programmable logic control devices. In addition, the open, flexible, programmable SCADA solution developed by MIKRODEV is also available to customers.

MIKRODEV products' performance and wide range of applications make them possible for customers to achieve faster, simplified and cost-effective results.

WARNING!

- ✓ Please take care of the following issues when using Mikrodev devices.
- ✓ Since the unit operates with 24 VDC (12-48 VDC) voltage, you should take care of the voltage level that the unit is connected to. If a voltage above this voltage level is applied, the device may be damaged and may be out of warranty.
- ✓ Make sure that the energy connection of your device is connected to the ground or to a properly grounded terminal.
- ✓ Make sure that the environment in which your device is being used is free of moisture, electric shock, vibration and dust.
- ✓ Pay attention to the supply voltage and the connections of the product. Mikrodev is not responsible for any issues due to power failure since there is no auxiliary supply (UPS) on the device.
- ✓ The fuse to be used must be a FF super fast type and current limit value 1A.
- ✓ Do not use the device under conditions other than the environmental conditions specified in the "Electrical Specifications" section (humidity, dust, liquid and temperature, etc.)
- ✓ Removing the warranty label on the product or removing the protective case will void the warranty.
- ✓ Products that are damaged, boxes have been changed and other brand labels are affixed are not covered by the warranty.
- ✓ The appliance must not be cleaned with solvents (thinner, benzine, acid etc.) or with abrasive cleaning agents.
- ✓ Only dry cloth should be used when cleaning the appliance.
- ✓ Do not open the device by removing the case of the appliance, do not interfere with the electronic components and circuits. There is no user-replaceable part inside the device.
- ✓ If there is a problem or malfunction on your device, it should only be repaired by an authorized service. Installation and electrical connections must be made by technical personnel in accordance with the instructions in the operating manual.

Failure to comply with these rules may result in death, serious injury or property damage

1 DM100 GENERAL INFORMATION

1.1 GC0 Board Type Physical Interfaces

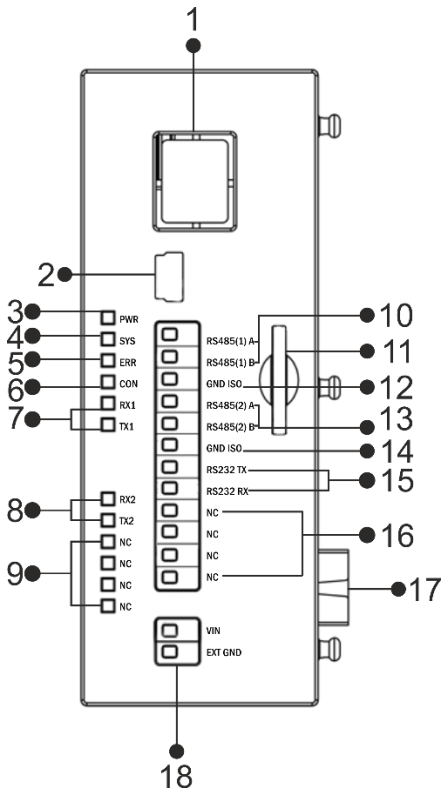

Figure 1 GC0 Board Type Connector and Physical Interface

1	Ethernet Port	**10**	RS485 Port 1 Connections
2	USB Port	**11**	SD Card Slot
3	System Power LED	**12**	Serial Port GND Connections
4	System Running LED	**13**	RS485 Port 2 Connections
5	System Error LED	**14**	Serial Port GND Connections
6	System Connection Status LED	**15**	RS232 Connections
7	RS485 Port 1 Data Transfer LED	**16**	N/A
8	RS485 Port 2 Data Transfer LED	**17**	Expansion Connector
9	N/A	**18**	Device Power (V+/V-) Connection

1.2 GC3 Board Type Physical Interfaces

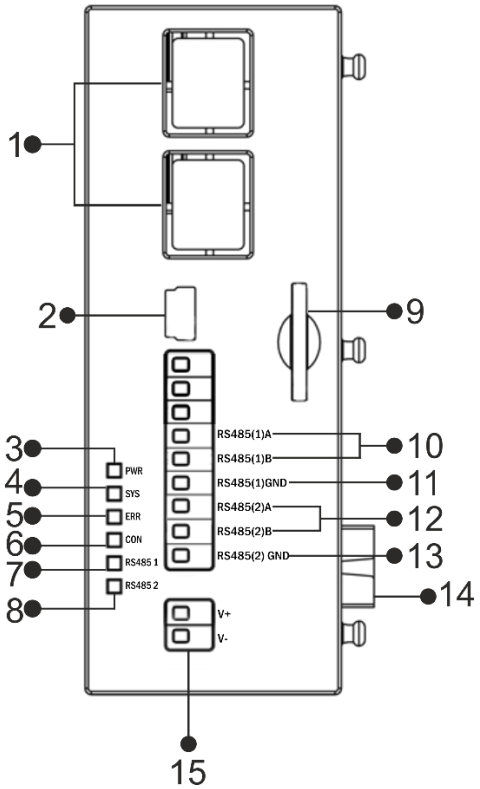

Figure 2 GC3 Board Type Connector and Physical Interface

1	Ethernet Ports	**9**	SD Card Slot
2	USB Port	**10**	RS485 Port 1 Connections
3	System Power LED	**11**	RS485 Port 1 GND Connections
4	System Running LED	**12**	RS485 Port 2 Connections
5	System Error LED	**13**	RS485 Port 2 GND Connections
6	System Connection Status LED	**14**	Expansion Connector
7	RS485 Port 1 Data Transfer LED	**15**	Device Power (V+/V-) Connection
8	RS485 Port 2 Data Transfer LED		

1.3 General Device Specifications

SPECIFICATION	ITEM	DESCRIPTION	
Processor	Processor Architecture	ARM Cortex A7	
	Adressing Architecture	Little Endian Addressing	
Electrical	Supply	24 VDC (12-48 VDC)	
	Power	<10W @ 24V DC	
	Real Time Clock	Integrated	
Enviromental Conditions	Operating Temperature	-25…+75 C	
	Storage Temperature	-30…+80 C	
	Humidity	5..95 RH	
Memory	SD Card Support	Micro SD	
	Retentive Memory	56 MB	
	Program Memory	256 MBit	
Communication Ports	Board Type	GC0	GC3
	Ethernet Port	1 Port, 10/100 Mbps	2 Ports, 10/100 Mbps
	RS485	2 Port, ESD Protection	2 Port, ESD Protection
	RS232	1 Port	
	USB	1 Port, Mini USB Type B	
Expansion Capacity	Din RAIL Type- CANBUS Expansion Modules	Up to 512 I/O Points	

2 INSTALLATION INFORMATION

2.1 Rail Installation

DIN Rail Mountage

First, the upper part of the device is mounted on the DIN rail. Then, with the help of the springs behind the device, when a lightly force is applied to the lower part, the device locates into the DIN rail easily and the montage is completed. (See Figure 2)

DIN Rail Demountage

To demount the device, firstly it is pulled from the bottom using flexibility of the spring, the device is removed from the DIN Rail and the demounting is completed.

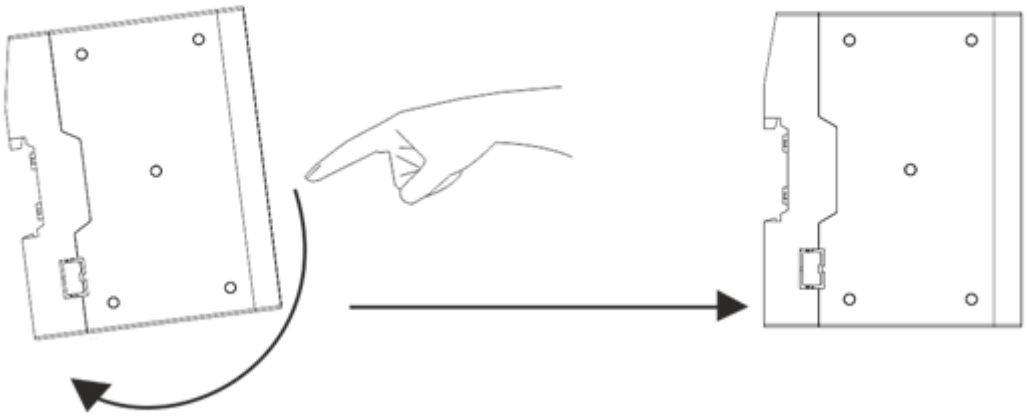

Figure 3 Mounting

2.2 Expansion Installation

The DM100 product and its extensions are mounted by sliding over the rail in such a way that the connectors correponds.

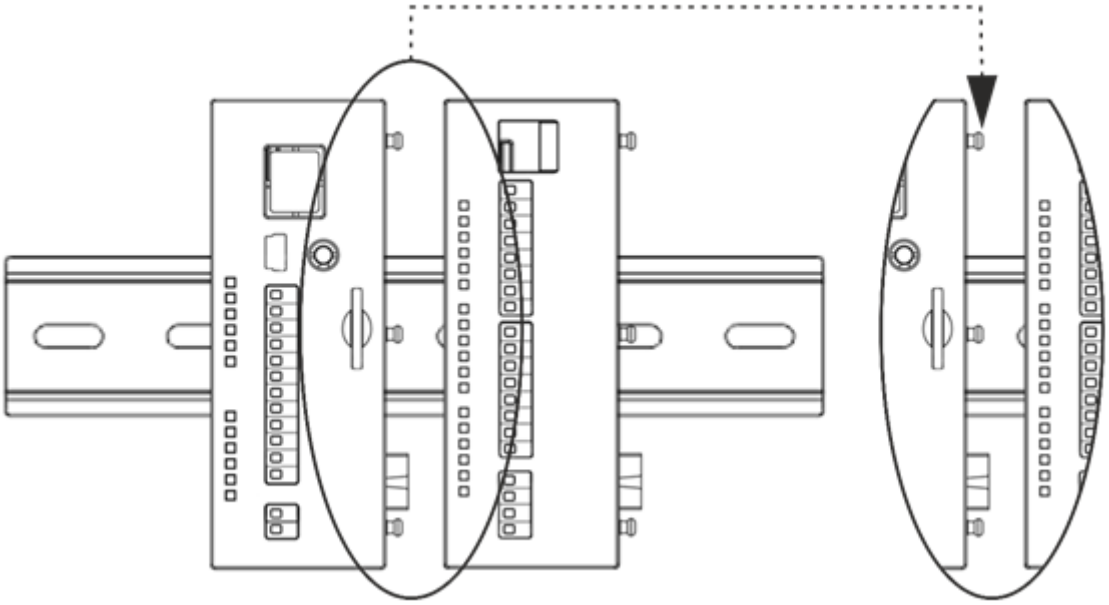

Figure 4 Expansion Installation

3 CONNECTION DIAGRAMS

3.1 Supply Connection

Board Type:	GC0,GC3
Supply:	12-48 VDC, Protected
Power:	< 13 W

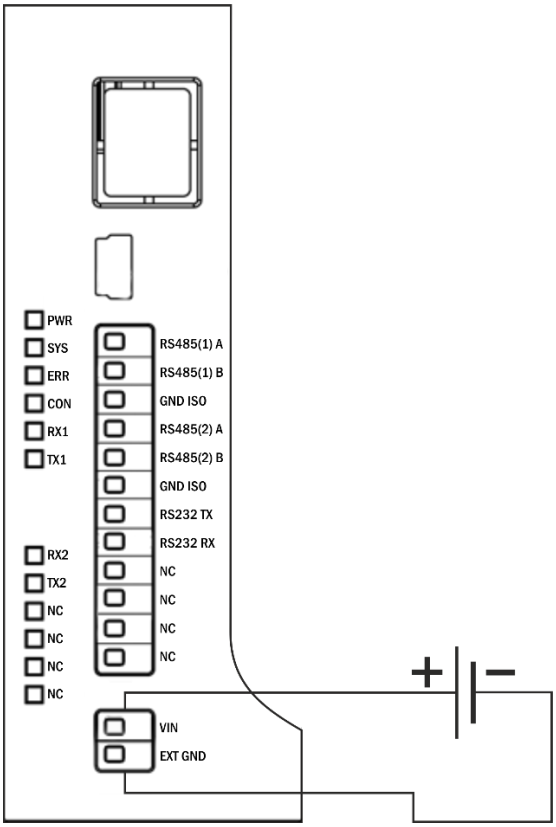

Figure 5 Power Connection Diagram

3.2 RS485 Serial Port

Board Type:	GC0, GC3
RS485 Port Count:	2 Port
Maximum Slave Counts:	Limited to Hardware
Isolation:	ESD Protection, 8 kV Direct, 25 kV Air Discharge
Communication Distance:	1000 m
Data Bits:	7-8
Stop Bits:	1-2
Parity:	None-Even-Odd
Baudrate:	300 bps to 200 kbps

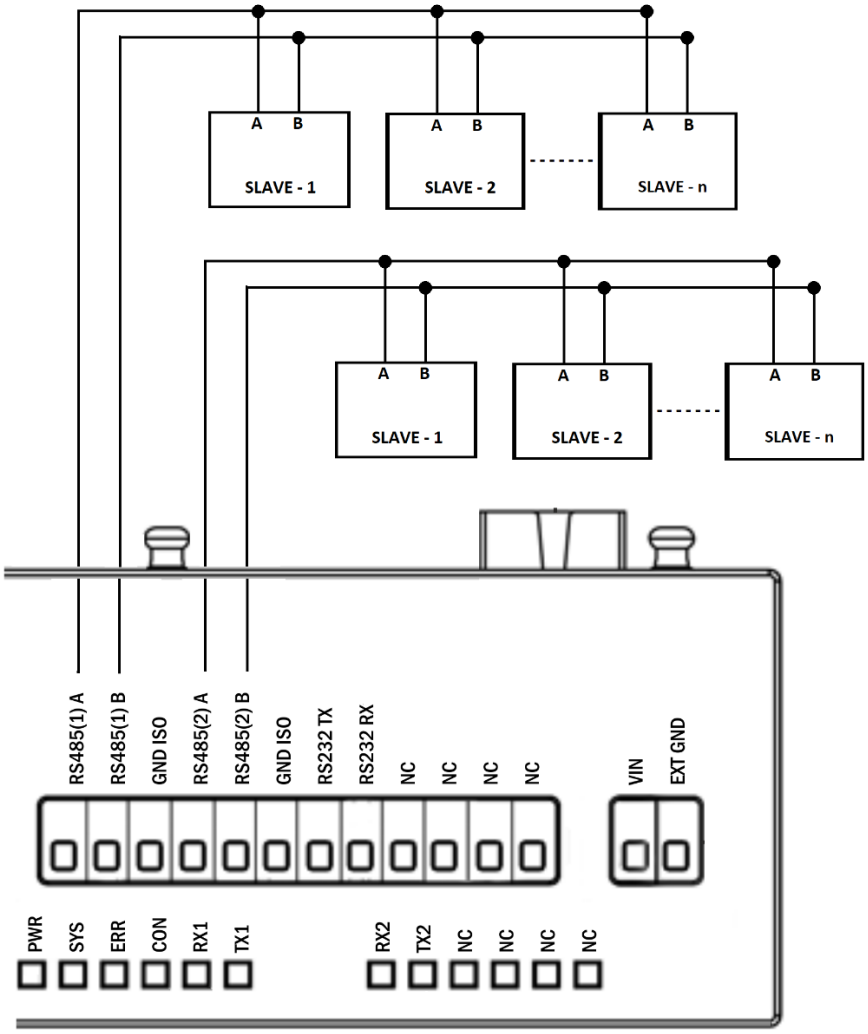

Figure 6 RS485 Serial Port Connection Diagram

3.3 RS232 Serial Port

Board Type:	GC0
RS485 Port Count:	1 Port
Communication Distance:	10 m
Data Bits:	7-8
Stop Bits:	1-2
Parity:	None-Even-Odd
Baudrate:	300 bps to 200 kbps

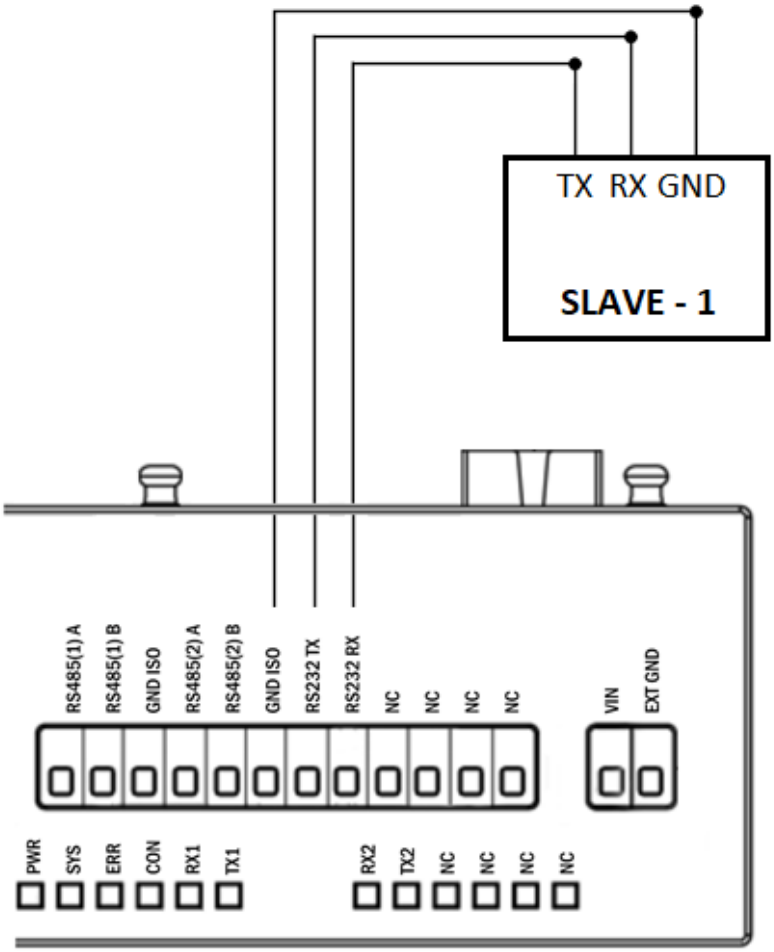

Figure 7 RS232 Serial Port Connection Diagram